ZONE	LTR	REVISIONS DESCRIPTION	DATE	APPROVED

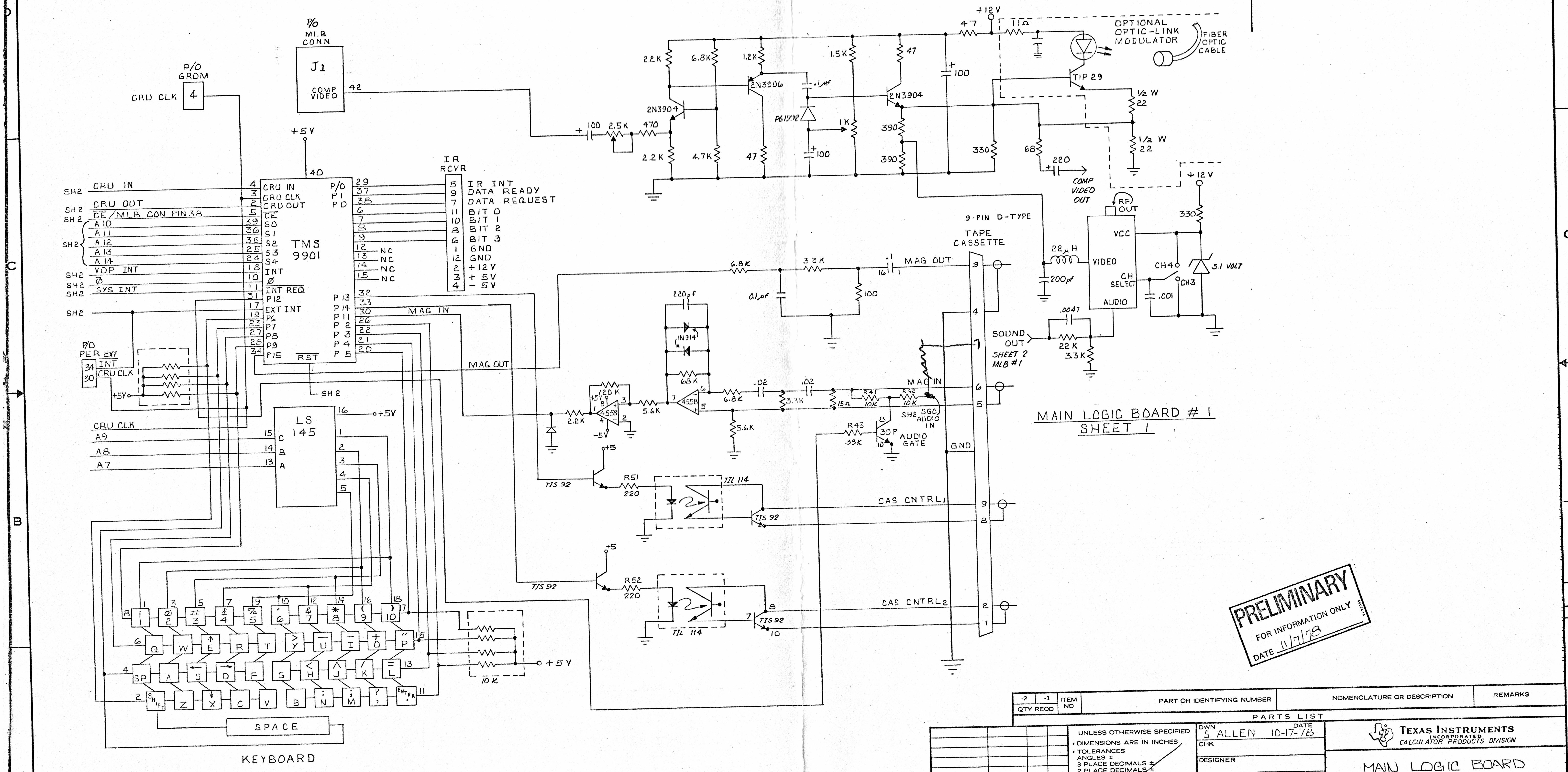

MAIN LOGIC BOARD # 1
SHEET 1

PRELIMINARY FOR INFORMATION ONLY DATE 11/7/78

-2	-1	ITEM NO	PART OR IDENTIFYING NUMBER	NOMENCLATURE OR DESCRIPTION	REMARKS
QTY REQD					

PARTS LIST

UNLESS OTHERWISE SPECIFIED
- DIMENSIONS ARE IN INCHES
- TOLERANCES ANGLES ± 3 PLACE DECIMALS ± 2 PLACE DECIMALS ±
- DIMENSIONING IN ACCORDANCE WITH ANSI Y14.5

MATERIAL:

DWN	S. ALLEN — DATE 10-17-78
CHK	
DESIGNER	
QA	
APVD	
PRODUCT ENG	
DESIGN ACTIVITY RELEASE	

NEXT ASSY | PRODUCT
APPLICATION

TEXAS INSTRUMENTS INCORPORATED
CALCULATOR PRODUCTS DIVISION

MAIN LOGIC BOARD

SUP DWG | SIZE D | DRAWING NO NA
SCALE NONE | REV LTR: | SHEET 1/4

CLASS CODE:

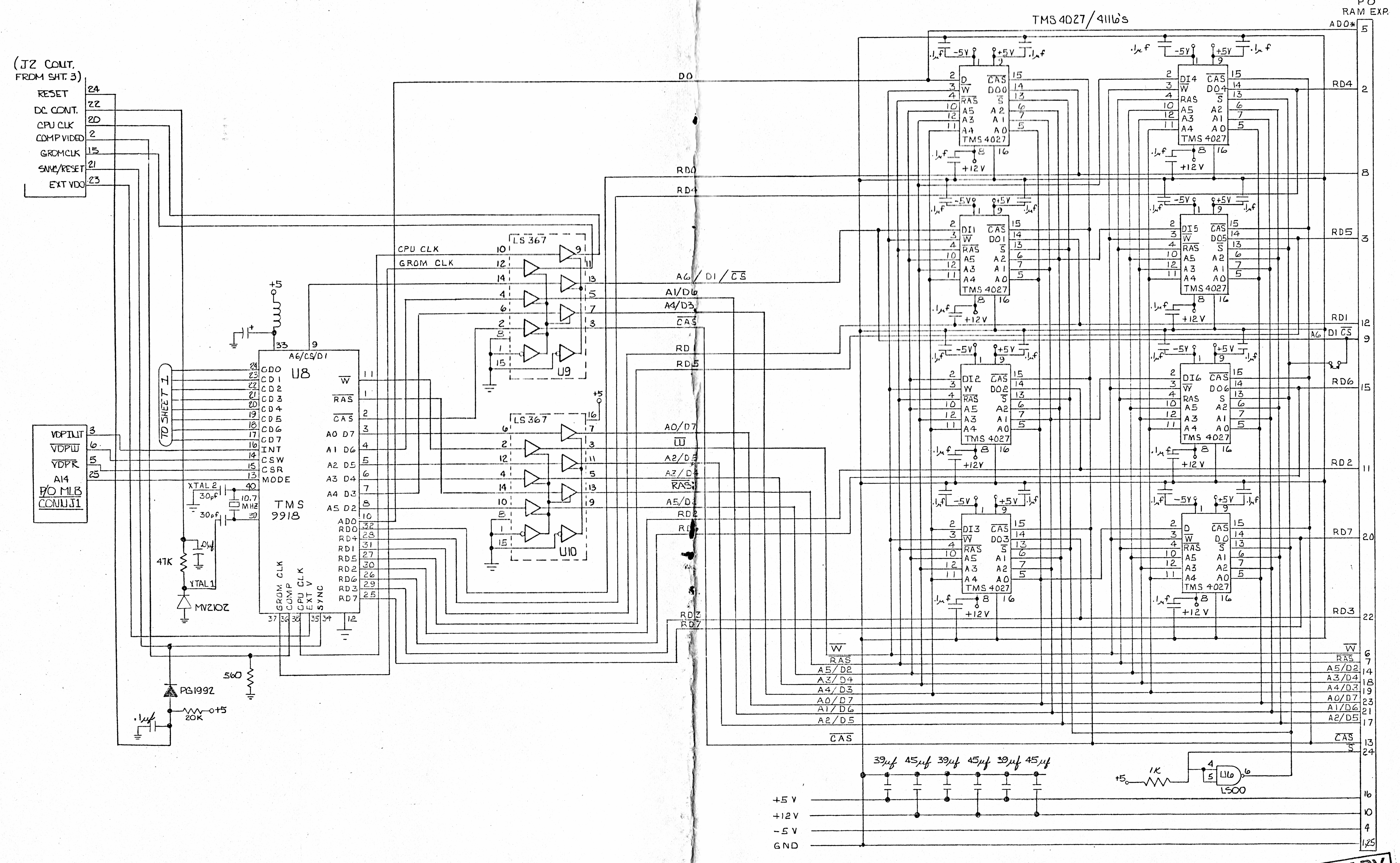

MAIN LOGIC BOARD
SHT. 2

PRELIMINARY
FOR INFORMATION ONLY
DATE 12/1/78

TEXAS INSTRUMENTS INCORPORATED Dallas, Texas	DWN S. ALLEN DATE 10-12-78	SIZE D FSCM NO 96214	DRAWING NO
	ISSUE DATE	SCALE NONE	SHEET 2/4

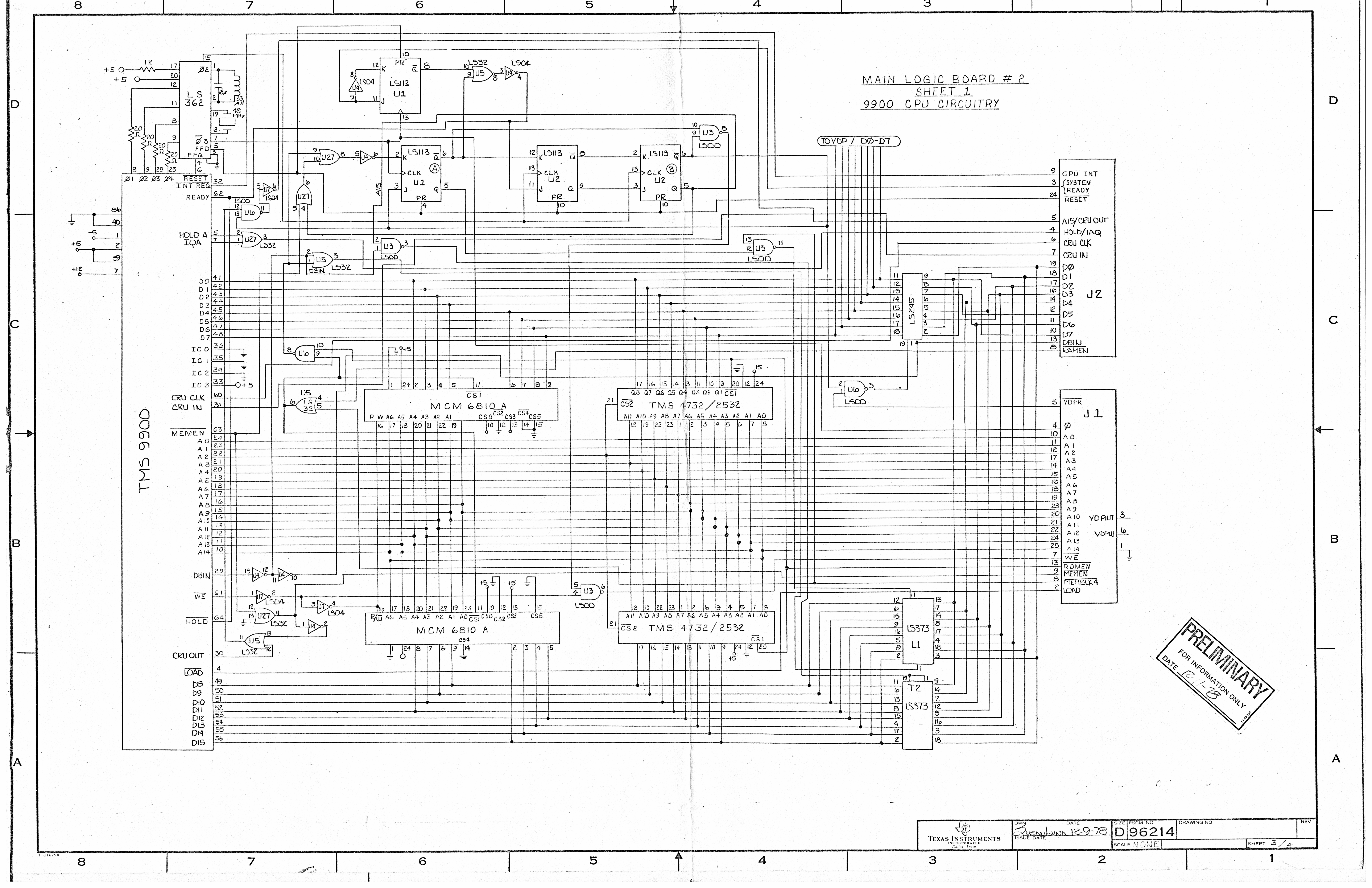
MAIN LOGIC BOARD # 2
SHEET 1
9900 CPU CIRCUITRY
TMS 9900
LS 362
48 MHz
LS113 U1
LS113 U2
LS04
LS32
LS00
MCM 6810 A
TMS 4732/2532
LS245
LS373 L1
T2 LS373
TOVDP / DØ-D7
J2
CPU INT
SYSTEM READY
RESET
A15/CRU OUT
HOLD/IAQ
CRU CLK
CRU IN
DBIN
RAMEN
J1
VDPR
ROMEN
MEMEN
LOAD
VDPINT
VDPW
HOLD A
IQA
MEMEN
DBIN
WE
HOLD
CRU OUT
LOAD
PRELIMINARY
FOR INFORMATION ONLY
DATE 12-11-78
TEXAS INSTRUMENTS INCORPORATED Dallas Texas
DWN Susan Lunn 12-9-78
SIZE D
FSCM NO 96214
SCALE NONE
SHEET 3/4

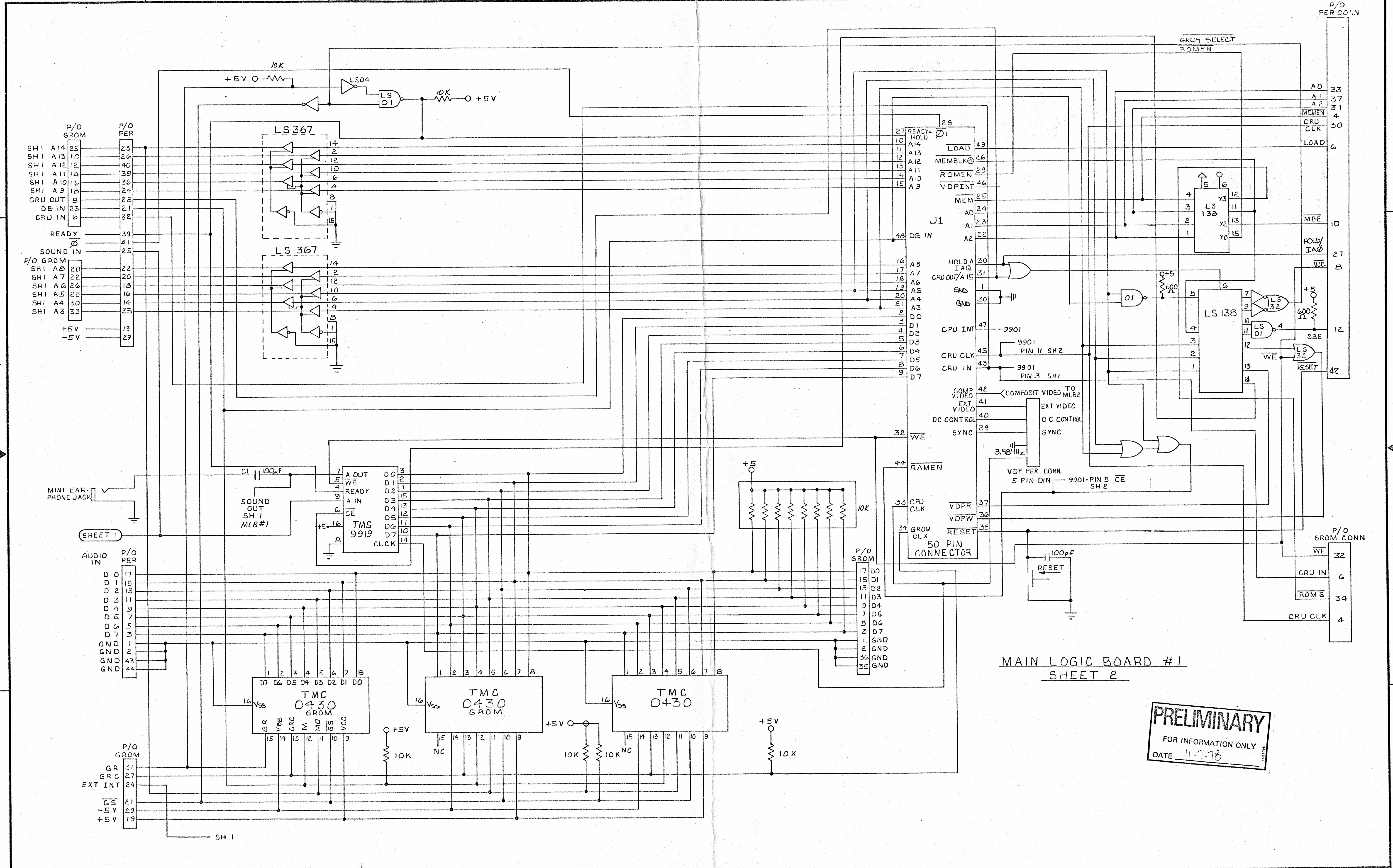

TEXAS INSTRUMENTS

DWN	DATE	SIZE	FSCM NO	DRAWING NO	REV
S. ALLEN	10-21-78	D	96214		
ISSUE DATE		SCALE NONE		SHEET 4 / 4	